Made available by Hasselt University Library in https://documentserver.uhasselt.be

Micelle Purification in Continuous Flow via Inline Dialysis

Peer-reviewed author version

VERSTRAETE, Kirsten; BUCKINX, Axel; ZAQUEN, Neomy & JUNKERS, Tanja (2021) Micelle Purification in Continuous Flow via Inline Dialysis. In: Macromolecules, 54 (8) , p. 3865 -3872.

DOI: 10.1021/acs.macromol.1c00242
Handle: http://hdl.handle.net/1942/36239

Micelle purification in continuous flow via inline dialysis

Kirsten Verstraete,[a] *Axel-Laurenz Buckinx,*[b] *Neomy Zaquen,*[a] *Tanja Junkers*[a,b*]

[a] Polymer Reaction Design group, Hasselt University – Institute for Materials Research, Wetenschapspark 1, B-3590 Diepenbeek, Belgium

[b] School of Chemistry, Monash University, 19 Rainforest Walk, Clayton, VIC 3800, Australia, tanja.junkers@monash.edu

For Table of Contents use only

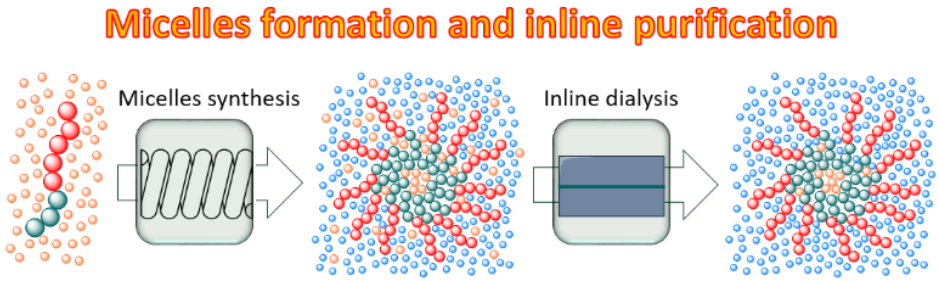

Abstract

Micelle solutions purification is made available via inline flow dialysis in which micelles are separated from the organic solvent used to dissolve the block copolymers in the micelle formation step. Purification was performed using simple and cost-effective dialysis units employing cellulose membranes. The proposed setup allows to remove THF from a micelle solution within few hours almost entirely in a looped flow system, without significantly changing the micelle size. Purification is found to be independent of the exact flow rates, and only on the circulation time through the dialysis units. The system is not only able to reduce the concentration of the organic solvent, but also water-soluble monomers can be removed. Lastly, the integration of the method into a full synthesis line to produce encapsulated micelles directly from block copolymer solutions is demonstrated, with a throughput of 1.2g of micelles per hour.

Introduction

The ability to self-assemble block copolymers in continuous flow makes it possible to yield kinetically stable micelles not only in high production rates, but also with increased reliability and lower batch-to-batch variation compared to classical batch-wise methods.[1,2,3] The particle shape and size can be altered by adjusting turbulent mixing conditions of water with the polymer solution in THF, which makes these micelles highly interesting for the use in bioimaging and drug delivery applications.[4,5] While flow micelle production is thus highly interesting, the question is still to remove any excess of organic solvent in order to make the transition to biomedical applications. Since the micelles are formed in continuous flow, the most convenient and practical way to remove the organic solvent is consequently also via inline purification techniques.

Inline purification has already been well investigated in the last decennium in the form of liquid-liquid extraction, which is one of the most used purification techniques in organic synthesis.[6,7,8] This technique relies on the solubility of a compound in two immiscible solvents, where usually a polar and a nonpolar solvent are used. The second step of the extraction is the phase separation, which is (in batch) mostly driven by the difference in density of the two liquid phases used. But on microscale it is almost impossible to achieve complete phase separation due to the small gravitational forces compared to the surface forces.[9,10] This problem can be overcome by using centrifugal action to separate the two liquids based on their densities, but still disadvantages such as long settling times can occur with such separation technique.[11] Alternative inline phase separators hence mostly rely on the different wettability properties of the immiscible solvents on a microporous membrane which corresponds to a selective permeability of the membrane. The inline phase separators based on this principle may feature porous capillaries or any other membrane-based separator.[12,13,14] PTFE is frequently used as the membrane for the selective

removal of the organic phase. The advantages of membrane phase separators are the wide variety of water immiscible solvents that can be separated and its compatibility with high flow rates which can reduce the workup time of the synthesis.[15]

The purification of a micelle solution is, however, different due to the inherent miscibility of the organic solvent used to dissolve the polymer in water and hence these classical methods of inline-separation fail. Continuous flow micelle purification therefore needs a slightly different approach than what is available to date. In batch, the purification of a micelle solution with two miscible solvents is typically performed via dialysis. Thereby, a cellulose membrane is used with a pore size small enough (typically below 3500 Da) to not let the species (micelles) diffuse across the membrane, but allow small molecules and solvents to pass. The small molecules will diffuse across the membrane via osmosis until equilibrium is reached. The driving force for the diffusion is the difference in concentration gradient at both sides of the membrane. Dialysis of a micelle solution in batch is quite time consuming, it often takes up to 48 hours and the water needs to be renewed several times in the process, in order to keep the concentration gradient high enough to remove almost all organic solvent. In a flow process, the concentration gradient would naturally be high at all times, and hence may accelerate the diffusion. The design of a continuous flow dialysis purification system which can be directly coupled to the self-assembly is hence of very high interest and has the potential to reduce the workup time tremendously. Furthermore, performing the phase separation in flow should reduce the amount of required neat water due to the small internal volume of the flow separator compared to batch.

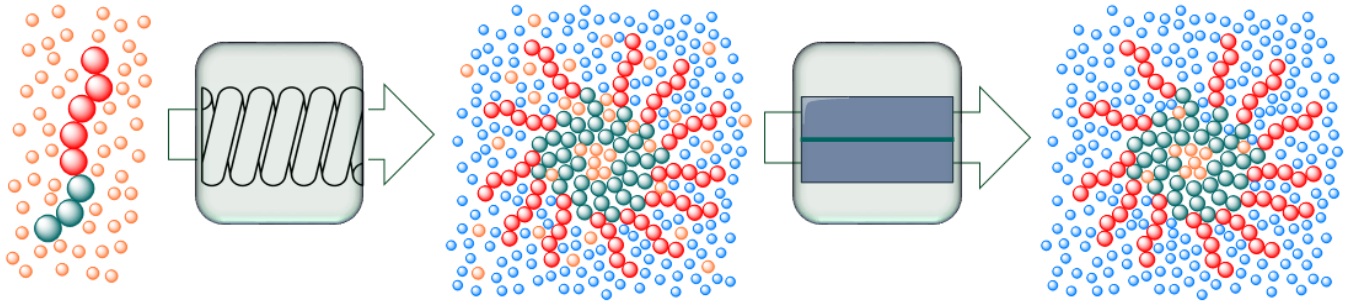

Figure 1. Schematic overview of the micelle formation in flow directly coupled to inline purification. In the first step the micelles are formed by mixing water (blue circles) with a block copolymer-THF solution and in the second step the THF (orange circles) is removed via inline dialysis.

In this work, the inline osmosis membrane separation for two miscible solvents will be discussed first using a commercially available flow extraction device (Zaiput), which makes use of a PTFE membrane.[11,16,17] PTFE membranes with different pore sizes are examined for the separation of THF out of a micelle mixture in water. Further, a custom-made separation unit is introduced, using a cellulose membrane in comparison. A cascade of five dialysis units is built to analyse the phase separation over multiple membrane units and the concentration of the organic solvent will be measured after each separator unit. Next, to increase the efficiency of organic solvent removal, a looped dialysis system in continuous flow is proposed. This system consists of only two separator units for dialysis in continuous flow. In addition, also the removal of a water-soluble monomer, 2-hydroxyethyl acrylate (HEA), will be examined in the looped dialysis flow reactor to demonstrate that the method is not only useable for micelle purification, but also for removing residual monomer from polymerization after a flow polymerization. In a final step, the inline purification is tested by telescoped micelle formation and continuous flow looped dialysis. The system described will proof to be useful to a large number of research groups that deal with micelles and

require solvent dialysis. The method is low cost and simple to implement, and yet fast to deliver results.

Experimental section

Materials

1,1'-azobis(isobutyronitrile) (AIBN) (Sigma-Aldrich, 98%), *n*-Butanol (Fisher, 99%), rhodamine 6G (Acros, 99%), DMSO-d_6 (Sigma-Aldrich, 99.9%) and 4-hydroxybenzaldehyde (Sigma-Aldrich, 98%), were used as received. Tetrahydrofuran (THF) was dried on a MB-SPS 800 system. 2-(dodecylthiocarbonothioylthio) propionic acid (DoPAT) was synthesized in the lab according to literature[18], 2-hydroxyethyl acrylate (HEA) (TCI, 95%) and Styrene (St) (TCI, 95%) were deinhibited over a column of activated basic alumina prior to use. Other chemicals and solvents were used as received.

Micelle formation directly coupled to the inline dialysis

To couple the micelle formation directly to the purification, the setup as detailed in Scheme 1 is used. The micelles are formed according to literature procedures.[1] The most important parts for the micelle formation in flow are the tubular reactor (2 mL PFA tubing, 0.75mm ID) and the static mixing tee (Upchurch scientific, U-466, swept volume of 2.2 µL). One inlet of the micromixer was coupled to a feed of the poly(hydroxyethyl acrylate)-*block*-polystyrene (PHEA-*b*-PS) block copolymer dissolved in THF (10 $mg \cdot mL^{-1}$) and the other inlet was coupled to a syringe containing only demineralized water. Both solutions are pumped into the reactor with a different flow rate (0.2 $mL \cdot min^{-1}$ and 1.8 $mL \cdot min^{-1}$ respectively), therefore two syringe pumps were required. The outlet of the reactor (A) is directly coupled to valve D and the micelles are pumped into the looped

dialysis system. B is a syringe pump, C is a HPLC pump and D, E, F are switch valves. The procedure for the dialysis in the looped flow system can be divided into three different steps. In the first step, the micelle solution is loaded into the system via the outlet of the reactor A, pump B is activated, enabling the water crossflow and pump C is switched off. The valves are positioned in the way that the micelle solution is pumped through the whole system, the tubing is disconnected at the end of the loop (valve D) in order to let the system stabilize. After the stabilization time (2,5 times the residence time), the pumps of the micelle formation are switched off, the tubing is connected again at valve D which is switched to the direction of the loop and the HPLC pump C is switched on in order to pump the micelle solution through the looped dialysis system. In the last step, valves E and F are both switched to collect the micelle solution.

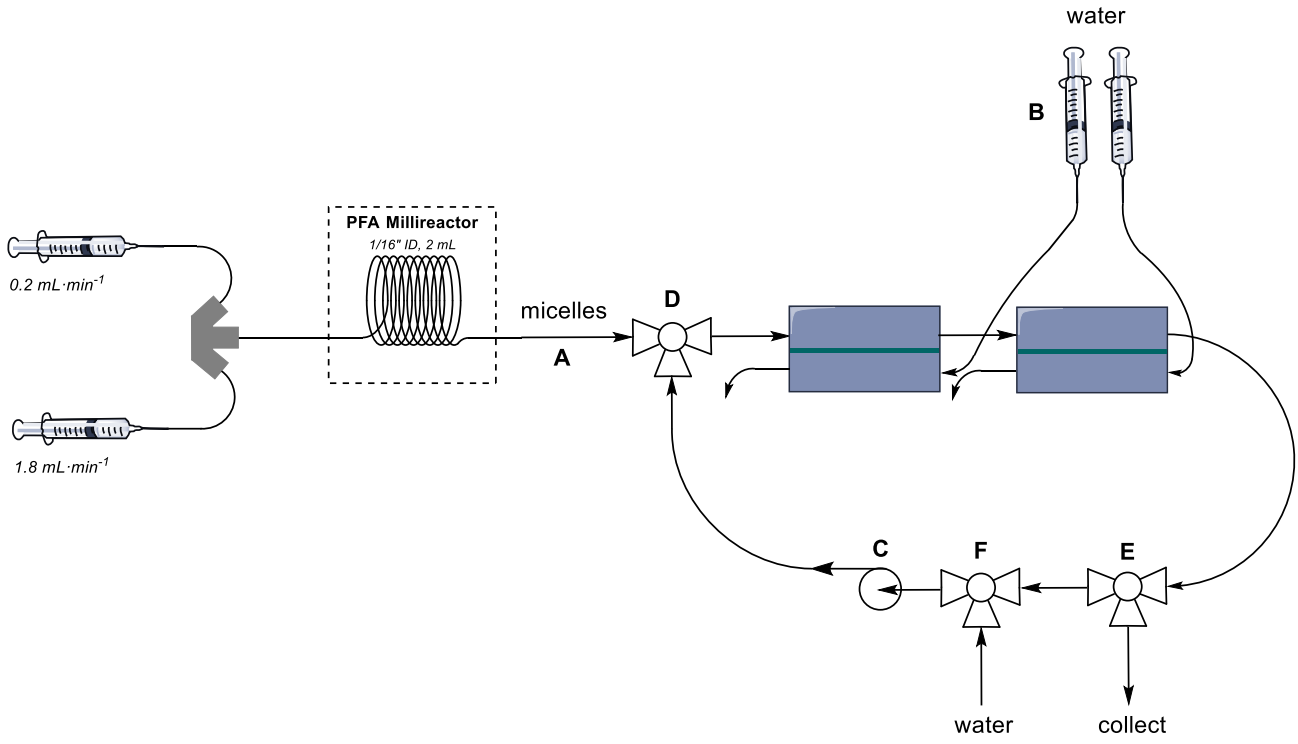

Scheme 1. Schematic for the setup of micelle formation directly coupled to inline dialysis.

Results and discussion

Design of dialysis units

While continuous production of micelles in flow is readily available with conventional HPLC parts, dialysis isn't as straight forwardly applied. Hence the focus on inline dialysis without further discussion on micelle formation in this study. Yet, attention has been paid to the quality of the micelles before and after the inline dialysis via dynamic light scattering (DLS) measurements. As mentioned earlier, conventional biphasic liquid-liquid extraction in continuous flow is already well investigated. Inherently though, for micelle formation, miscible solvents are used, in many cases water and THF. Therefore, another approach to solvent separation is necessary, one that does not reply on spontaneous phase separation. The commercial system often used for liquid-liquid extraction is the so-called Zaiput separator. This flow unit relies on the wettability of a hydrophobic membrane (PTFE) with a certain pore size to induce separation. The membrane will only be wetted with one phase while the other non-wetting phase will be retained. Separation thus relies on the difference in hydrophobicity of the two mixed solvents. In addition to this, the pressure on each side of the membrane is carefully controlled so that only one phase can flow through the pores in the membrane. This type of phase separation was introduced a few years ago and has rapidly become a common method in flow processing, with phase separations being quite efficient, allowing for aqueous extraction of solvent phases inline in coupled flow reactors.

To start, the very same system was tested towards THF removal from micelle solution, hoping the hydrophobicity difference might be large enough to warrant separation. Results indicated though that the membrane used could not selectively remove THF from the solution. Hydrophobic PTFE membranes with a pore size of 1 micron did not give any selective separation and a micelle solution was collected from both outputs of the Zaiput device. Using hydrophobic membranes with

a pore size of 0.2 micron, micelles were retained on one side of the membrane, but also no changes in THF concentration were observed upon ^{1}H NMR analysis, indicating THF was not selectively removed from the solution. While the commercial units are very useful for biphasic liquid-liquid separation, a different system clearly needed to be developed for the removal of the miscible organic solvent THF from an aqueous micelle solution.

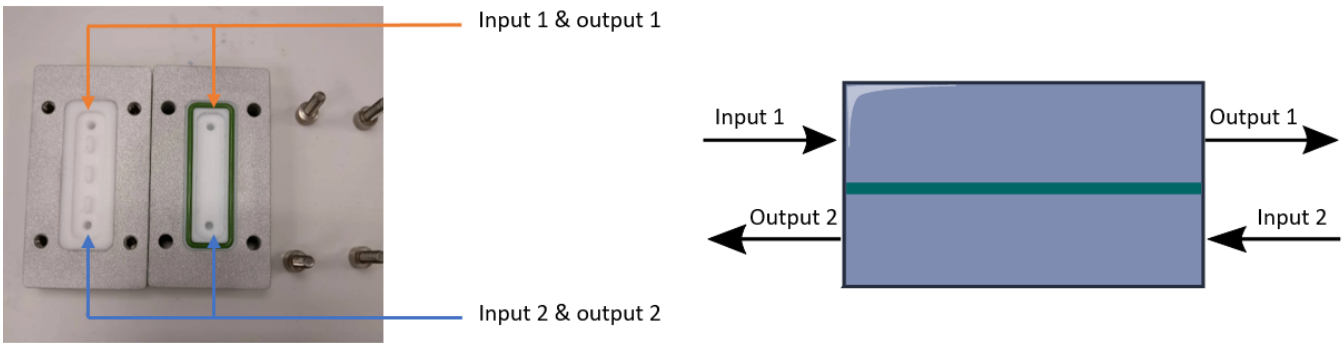

Figure 2. Photo of the opened custom-made dialysis device (left) and a schematic representation of the top view of the device, where in- and output 1 (containing the micelle solution) are separated by the membrane from in-and output 2 (containing water) (right).

A simple, yet specialized dialysis system was built with a cellulose membrane (pore size for cut-off of molecular weights < 3500 Da) to separate the organic solvent from the micelle solution (see Figure 2). A water crossflow is applied as low concentration phase to make the organic solvent diffuse via the membrane. Since the water is constantly replenished, the concentration gradient is high at all times. The use of small pore size membranes prevents micelles from crossing the membrane, while the organic solvent can cross. The optimal flow rate for the purification of a THF/water mixture (10/90 v/v%) as a proof-of-concept process was tested at different flow rates using a single dialysis unit. The results displayed in

Table 1 show that the optimal THF removal of a system with one dialysis unit is achieved at overall lower flow rates. The lower the flow rate, the more contact time is given for the THF to

cross the membrane in a single pass of the device. A lower limit for the flow rate is, however, given to keep a reasonable overall flow rate of the reactor, which would later be defined by the micelle formation itself. A removal of more than 50% as observed in a single pass is, however, a quite reasonable result.

Table 1. Amount of THF removed using one pass in a dialysis unit at different micelle solution flow rates. Concentrations of residual THF were calculated from ^{1}H NMR.

Micelle solution flow rate* $mL \cdot min^{-1}$	THF extracted %
0.025	63
0.05	46
0.1	32
0.2	28
0.4	13
0.6	6

* The water crossflow rate is always twice the micelle solution flow rate

Coupling of dialysis units in series

In order to remove as much of the residual THF as possible, multiple dialysis units (up to a set of five) were coupled in series (see SI). This is an alternative to building simply a unit with a larger contact area and allows for more flexibility in reactor design. It should also be noted that the separators are custom-build and were designed keeping biphasic PTFE membrane separation as in the Zaiput devices in mind, which also influenced their size. Regardless, the use of a series of separation units is rather common in continuous flow inline purifications. ^{1}H NMR analysis was

performed after each dialysis unit and the progressive results are visualized in Figure 3. A continuous removal of THF is clearly visible with each unit. However, in the beginning of the process, when the THF concentration is the highest, the removal of THF is the fastest and with a decreasing concentration of THF, also the efficiency of removal decreases with the osmotic pressure. In total, a decrease in THF concentration from 1.03 $mol \cdot L^{-1}$ to 0.21 $mol \cdot L^{-1}$ after using five dialysis units was realized, thus roughly 80% of the organic solvent. This by itself could be seen as a success, as removal in the units is very fast compared to classical batch dialysis. Yet, extrapolation of the data in Figure 3 suggests that a very large number of extractors would be required for full removal of all organic solvent. In batch dialysis five steps would typically be sufficient for full removal. Yet, in the flow devices the volume difference between neat water and extracted solution is much smaller, hence explaining the lower efficiency in the total process. It should be noted here that on a production scale, use of ten or more separators would not be a problem, only in R&D settings where larger flexibility is required, this seems unfavourable overall.

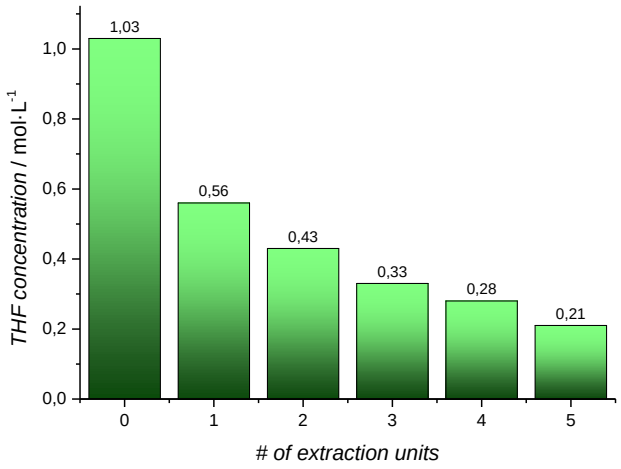

Figure 3. Progressive removal of THF with additional separation stages. Concentrations were determined via ^{1}H NMR.

Design of a looped flow reactor

As promising as the decrease in THF concentration of 80% over five dialysis units was, an alternative approach is required in order to decrease the concentration even more in a lab-based setting. Therefore, a looped flow reactor design was constructed, in which the micelle solution is circulated several times over the same separator unit, in this way creating more contact time on the dialysis membrane. A looped flow reactor with five dialysis units would require five syringe pumps in a complete micelle formation and purification process, therefore a less complex design with two dialysis units was constructed to keep the instrumental requirements at minimum (see SI). The micelle solution is injected into the first dialysis unit which is directly coupled to the second with a short piece of tubing. Next, the loop pump recirculates the solution into the dialysis units. This process can be continued for several hours and the micelle solution can ultimately be collected via a switch valve. Such looped system is not fully continuous, but can still be integrated in a continuous process using intermediate collection vessels. This approach is not untypical in flow synthesis. In the first experiments in which THF removal from the micelle solution was performed, the number of loops were counted and rather short dialysis times (between 4 minutes and 40 minutes) were tested. Figure 4 summarizes these investigations and – unsurprisingly – shows similar trends as for the coupled dialysis units, as the number of loops merely mimic a larger amount of separator units in a sequential linear flow setup. The removal of THF is the fastest when the concentration is the highest, and the efficiency reduces with each loop/step. In addition, the same overall effect of the flow rate on the result as in Table 1 is seen as well. A lower flow rate (0.2 $mL \cdot min^{-1}$) removes the THF faster. At the same time, the removal has no larger influence on the micelle size itself. Before flow dialysis, the average micelle size was determined to 18.4 nm

and 17.7 nm (SI Table 2, entries 1 and 5). After dialysis particle sizes ranged from 16.1 – 27.6 nm for these experiments (SI Table 2, entries 1-11). Some variation in size is not unexpected as the removal of THF inherently changes the structure of the micelle to a certain degree.

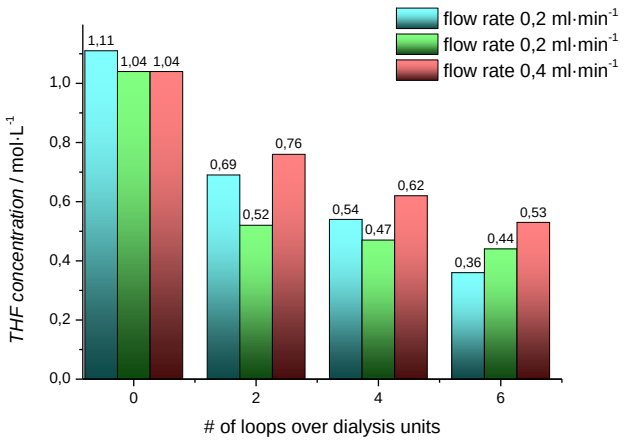

Figure 4. THF removal after several loops over the dialysis units, for a micelles flow rate of 0.2 mL·min^{-1} with a water crossflow rate of 0.4 mL·min^{-1} (blue and green bars) and for the micelles flow rate of 0.4 mL·min^{-1} with a water crossflow rate of 0.8 mL·min^{-1} (red bars).

Increase of the looping times

The results of these very short loops are not perfectly consistent and the 80% THF removal of the five coupled dialysis units is not achieved yet. Therefore, looping times of several hours were used in order to go to sufficiently low THF concentrations. In Figure 5, longer looping times for the dialysis of THF out of the micelle solution are presented with a micelle solution flow rate of 0.2 mL·min^{-1} and a water crossflow rate of 0.4 mL·min^{-1}. A looping time of one hour corresponds to about seven loops. Results show that after three hours of dialysis, the THF concentration falls below 10% of the starting concentration and the results are much more reliable than for the shorter loops as depicted in Figure 4. Duplicate measurements gave the same THF concentrations after a defined time with an uncertainty of only 2-3%. The second experiment (green bars in Figure 5)

was looped for four hours and the THF concentration could be decreased down to 0.02 mol·L^{-1} (1 %) and hence almost complete removal. This displays a quite remarkable result. DLS measurements showed a micelle size between 17.1 nm and 31.6 nm after dialysis (SI Table 2, entries 12-20). The diameter before dialysis was 17.4 nm and 18.5 nm respectively (SI Table 2, entries 12 and 17), so again a slight increase in average size was observed.

While 4 hours seem to be required for full removal, we limited the looping time to 2h in the following experiments, since this already allows to distinguish the best reaction conditions and saves material in the further investigations.

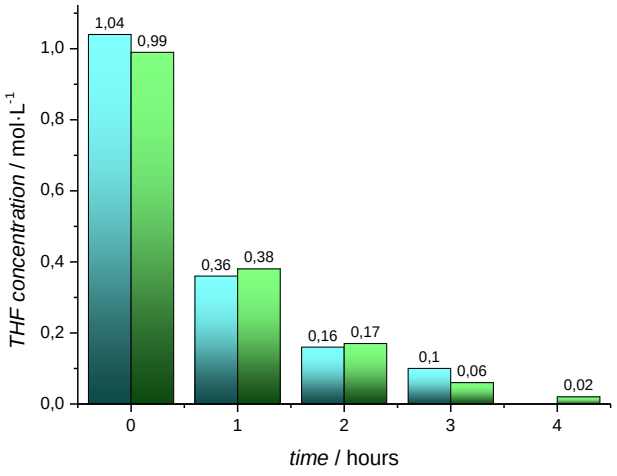

Figure 5. Dependence of THF removal efficiency on looping times, with a micelle solution flow rate of 0.2 mL·min^{-1} and a water crossflow rate of 0.4 mL·min^{-1}.

Effect of the micelle solution flow rate

The effect of increasing the flow rate of the micelle solution from 0.2 mL·min^{-1} to 0.4 mL·min^{-1} (and therewith the water flow rate from 0.4 mL·min^{-1} to 0.8 mL·min^{-1}) is evaluated again (now for looping times of several hours instead of minutes), since a higher flow rate could be interesting for the coupling of the micelle formation and dialysis later on. As Figure 6 demonstrates, the increase of the flow rate has no effect on the THF removal over a longer period of time, since the

micelle solution passes the dialysis units faster when the flow rate is doubled to 0.4 mL·min^{-1}. This is hence no contradiction to the data in Figure 4, where the number of loops over the dialysis unit was counted. So, when the flow rate is higher, less THF is removed per pass. Yet, at constant looping time, the same amount of THF is removed for both flow rates since the number of passes rises proportionally. As expected from literature,[2] the increase of the flow rate has no influence on the THF removal and also the average sizes of the micelles stay in the same range (20.8 nm and 17.1 nm for 0.2 mL·min^{-1} and 20.4 nm and 24.5 nm for 0.4 mL·min^{-1}).

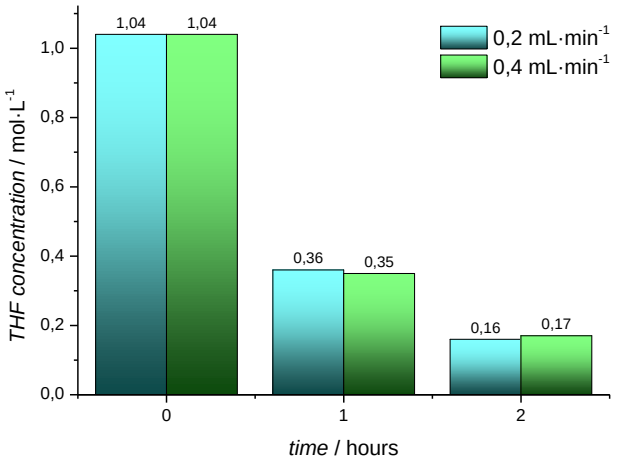

Figure 6. The effect of increasing the micelle solution flow rate from 0.2 mL·min^{-1} to 0.4 mL·min^{-1} (and therewith the water crossflow rate from 0.4 mL·min^{-1} to 0.8 mL·min^{-1}).

Effect of the water crossflow rate

Another important parameter for the THF removal via dialysis is the water crossflow rate. Therefore, the effect of the water crossflow rate was evaluated in the last step (see Figure 7). Note that up to this point the crossflow rate was always exactly twice the micellar solution flow rate as mentioned above. It may in the first instance be expected that the THF removal would proceed faster when the water crossflow would be increased, because with a faster renewal of the water, a higher concentration gradient is achieved. However, no significant change was seen when

performing the experiments. The absence of a more efficient removal at higher flow rates is explained by the fact the concentration of the removed small molecule – here THF – in the water crossflow is very low at any time. Hence faster renewal of water does not make much difference, unlike in batch dialysis. In the following, the flow dialysis was also tested for conditions where the water crossflow rate equals the micelle solution flow rate. This is interesting because at longer dialysis times and higher flow rates, significant amounts of water would become necessary and with a lower water crossflow rate the water usage would be highly reduced. As seen in Figure 7, slightly less THF is removed after two hours when the water crossflow rate equals the micelles flow rate. Still, these results are still matching the expectations. Again, the change in process has no significant effect on the micelle size (see SI Table 2, entries 17-20 and 23-25), and is in the same range as in the previous experiments, showing that sheer effects do not play a significant role in the extraction/dialysis.

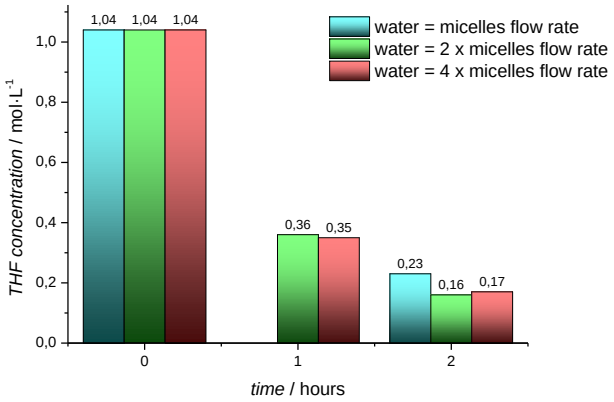

Figure 7. The effect of the water crossflow rate is evaluated for the water flow rate =, 2x and 4x the micelle solution flow rate of 0.2 mL·min^{-1}.

Dialysis of organic molecules

Now that dialysis of an organic solvent in flow is established, dialysis of other organic molecules of interest was tested in a last step. Next to micelle formation, another important application of the

dialysis device is to remove residual monomers after a polymerization inline. Specifically, for synthesis of block copolymers residual monomer is detrimental to successful block extension, and needs to be removed if occurring. The principle is hereby the same. Via osmosis, a monomer can be removed in a solution containing polymer that is not able to pass the dialysis membrane and small-sized monomer. To investigate the removal of such residual monomer, a one molar solution (12 v/v %) of 2-hydroxyethyl acrylate (HEA) was added to the micelle solution and then subjected to flow dialysis. It can be observed from Figure 8 that after four hours the HEA concentration is decreased to 0.12 M, which corresponds to 1.4 v/v % of HEA in the total micelle solution. This experiment shows that the dialysis system is not only capable of removing the organic solvent out of the micelle solution, but in principle also of the removal of residual monomer. Baxendale *et al.* evaluated the removal of an aqueous soluble monomer, acrylic acid, from the poly(acrylic acid) polymer solution before, using biphasic extraction and employing the insolubility of poly(acrylic acid) in water.[19] They were able to fully purify the polymer solution after 40-60 minutes using three membranes in series, but they also encountered that the extraction rate is dependent on the concentration and volume of the sample. The flow dialysis presents here a convenient alternative that is more broadly applicable since solubility of the polymer does not influence the outcome of the purification. Generally, membrane dialysis can also be used to remove non-water-soluble monomers when being performed with membranes that are stable towards organic solvents. We will investigate this in more detail in future studies.

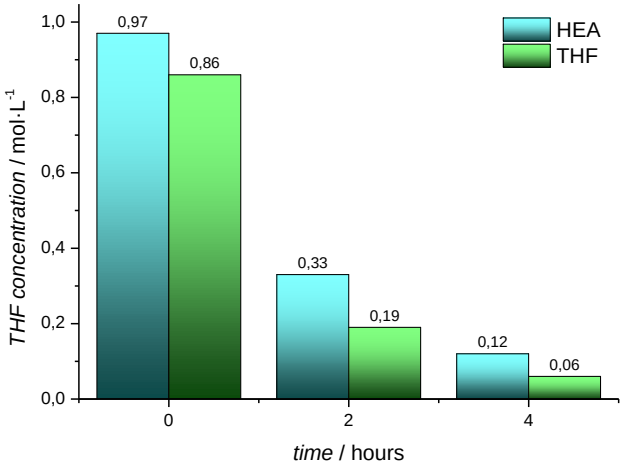

Figure 8. Removal of water-soluble monomer HEA with a micelle solution flow rate of 0.2 mL·min^{-1} and a water crossflow rate of 0.4 mL·min^{-1}.

Towards true inline purification

After the underlying effects of flow dialysis had been investigated, and optimal conditions been determined, the flow dialysis was coupled to a full micelle formation process in flow, starting from block copolymer solutions. Using literature procedures, the micelles are often formed with a total flow rate of 2 mL·min^{-1}, thus at considerable higher rates than in the experiments described above. However, following the experiments shown in Figure 7, the water crossflow rate was reduced equal to the rate of the micelle solution stream. Before the coupling of the full reactor assembly, we tested though the THF removal at 2 ml·min^{-1} in standalone mode. Figure 9 depicts the results for the comparison of the THF removal with a flow rate of 2 ml·min^{-1} with the results of previous experiments (0.2 ml·min^{-1} + 0.4 ml·min^{-1} and 0.2 ml·min^{-1} + 0.2 ml·min^{-1}, where the second rate gives the crossflow rate). It is clearly visible that for the experiment with a flow rate of 2 ml·min^{-1} the results are comparable with the results of the other experiments, which is a good confirmation of the trends seen above in that the flow rate has an effect on the removal efficiency per membrane pass, but not over the same total looping time. After two hours a THF concentration of 0.19 mol·L^{-}

[1] was reached which is in line with the expectations and in excellent agreement with all other experiments described herein. DLS measurements show that also at these high flow rates the micelles stay intact, with an average size of 21.9 nm (for 1 h dialysis) and 23.2 nm (for 2 h dialysis), respectively.

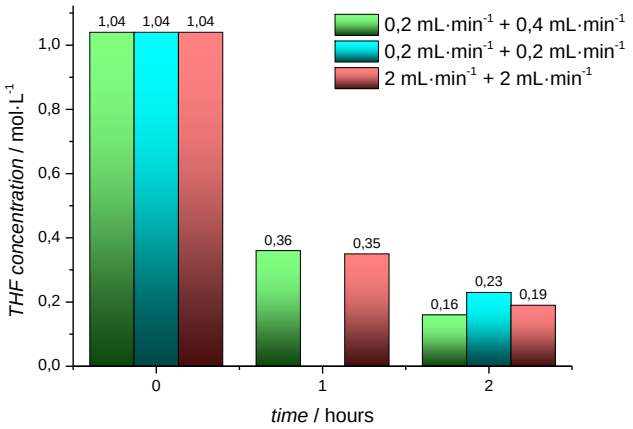

Figure 9. The effect of increasing the flow rate to 2 mL·min^{-1} with the same water crossflow rate. The dialysis with 0.2 mL·min^{-1} for both flow rates was only performed for 2 h circulation time to safe material.

Micelle formation with the encapsulation of a model dye directly coupled to the inline dialysis

The ability to form micelles in flow and directly couple it to the inline purification would not only reduce the synthesis time tremendously but also reduce the workload substantially. Thus, in the last step the flow dialysis was integrated into a full micelle synthesis line, including encapsulation of a model payload. The synthesis of purified micelles in one continuous process together with the high stability and good reproducibility that a flow process provides, make such approach very interesting for the use in drug delivery applications. The setup used for the micelle formation in flow was already shown in Scheme 1. The micelles are formed by mixing a PHEA-*b*-PS block copolymer solution in THF and combining it with water in a 10/90 v/v% ratio. The

micelle solution and water are mixed in a static mixing tee which is connected to a 2 mL reactor. The total flow rate of the residual micelle solution is 2 $mL \cdot min^{-1}$, therefore the flow rate of the dialysis loop was kept the same at first. After two hours of circulation, the THF concentration was decreased to 0.19 M which is very much alike the results that were obtained from the separate dialysis system in Figure 9. In the next step, the encapsulation of the micelles was evaluated and the looping time was increased to four hours to further reduce the THF concentration. The encapsulation was performed by dissolving rhodamine together with the block copolymer in THF and the micelle formation and purification proceeded the same as before. In this way the dye was encapsulated in the micelles in the first flow stage, and the purification by dialysis removed the residual dye in solution alongside the solvent. The THF concentration was reduced to only 0.05 M, see Table 2, after four hours. The results in Table 2 show that also with a lower flow rate and five hours of dialysis time the residual concentration of THF was 0.04 M. This demonstrates again that the looped dialysis is independent of the flow rate. Moreover, the fact that there is a limit in the THF removal efficiency of the micelle solution may be due to some of the THF being also encapsulated in the micelle core.

The UV-VIS results presented in Figure 10 show the successful encapsulation of rhodamine in the PHEA-*b*-PS micelles for the different dialysis conditions tested. The average sizes of the micelles which encapsulated rhodamine are slightly higher (27.2 – 37.7 nm) than the micelles without the dye (25.2 nm for the coupled system). The difference is not too large though. When synthesizing these micelles in continuous flow, about 1.2 g of encapsulated micelles are produced in one hour in the present procedure, showing that this approach is able to produce significant amounts of material in short times. With typical batch procedures often only milligram amounts are made, and dialysis would take long time.

Table 2. Micelle formation and dye encapsulation in flow directly coupled to the inline dialysis loop.

Micelles flow rate $mL \cdot min^{-1}$	Water flow rate $mL \cdot min^{-1}$	Time h	THF concentration M	N_{mean} nm	Đ	Remarks
2	2	2	0,19	25.2	0.345	
2	2	4	0,05	37.7	0.365	Dye encapsulated
0.2	0.4	4	0,06	30.4	0.317	Dye encapsulated
0.2	0.4	5	0,04	27.2	0.299	Dye encapsulated

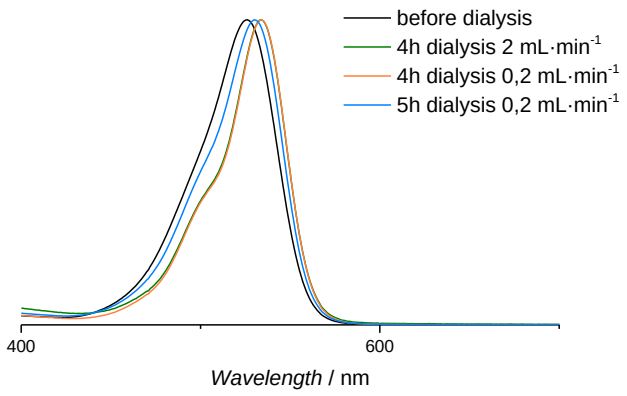

Figure 10. UV-VIS analysis of the PHEA-*b*-PS micelles encapsulated with rhodamine before (black) and after dialysis.

Conclusion

An inline purification system for micelle synthesis in continuous flow has been introduced. Micelles are made from mixing solutions of suitable block copolymers in THF with water. In-line flow purification was accomplished via custom-made dialysis units which were operated in a continuous loop. With each pass of the dialysis membrane in the loop, small molecules, hence THF is removed from water. Overall, an independency of the purification efficiency from flow rates is observed, and only the total loop time determines the success of the separation. Next to solvent, the system is shown to also remove monomers, as long as they are at least partially water soluble, such as hydroxy ethyl acrylate. Flow dialysis seems to have a negligible influence on particle size, as determined from dynamic light scattering monitoring. Further, it is possible to purify also micelles with an encapsulated payload, in here a dye, make the method ready for use in biomedical applications. Synthesis of these encapsulated micelles could be achieved directly from block copolymer and dye solutions without any intermediate work-up of solutions. Overall, the benefit of using flow dialysis is not only that it can be operated semi-continuously, but it is also considerably faster than typical batch methods. Reduction of THF content down to 1% is achieved within 4h or purification, whereas batch procedures often require days to achieve the same. Further, since flow methods are inherently scalable, they allow for production of encapsulated micelles in significant amounts. Our present, small scale R&D setup allows already to produce up to 1.2 g of micelles per hour.

With the introduction of continuous micelle purification, it is now possible to build setups that can conveniently produce micelles of different shapes, forms and chemical setup. In conjunction with out previous work on flow micelle formation itself, this should solve several issues around reproducibility of micelle synthesis, and payload encapsulation. Especially since our setup is easy

to use, and also inexpensive, we hope it will find broad use in the community and foster new, exciting developments.

Supporting Information. Including experimental details, design of reactors, calculations and DLS data. The following files are available free of charge.

Supporting information (file type, i.e., PDF)

AUTHOR INFORMATION

Corresponding Author

Tanja Junkers (tanja.junkers@monash.edu)

Author Contributions

The manuscript was written through contributions of all authors. KS performed most experiments, with support of AB. TJ and NZ oversaw the project and coordinated actions. All authors have given approval to the final version of the manuscript.

ACKNOWLEDGMENT

The authors are grateful for funding from Hasselt University and the Fonds Wetenschappelijk Onderzoek (FWO). Further, support of the project via a discovery project of the Australian Research Council (ARC) in the form of DP190103309 is kindly acknowledged.

References

[1] A. Buckinx, K. Verstraete, E. Baeten, R. F. Tabor, A. Sokolova, N. Zaquen, T. Junkers, Kinetic Control of Aggregation Shape in Micellar Self-Assembly. *Angew. Chem., Int. Ed*. **2019**, 58, 13799.

[2] A. E. Cervera-Padrell, S. T. Morthensen, D. J. Lewandowski, T. Skovby, S. Kiil, K. V. Gernaey, Continuous Hydrolysis and Liquid–Liquid Phase Separation of an Active Pharmaceutical Ingredient Intermediate Using a Miniscale Hydrophobic Membrane Separator. *Org. Process Res. Dev.* **2012**, 16, 888−900.

[3] T. Chang, M. S. Lord, B. Bergmann, A. Macmillan, M. H. Stenzel, Size effects of self-assembled block copolymer spherical micelles and vesicles on cellular uptake in human colon carcinoma cells. *J. Mater. Chem. B* **2014**, 2, 2883 – 2891.

[4] K. Kataoka, A. Harada, Y. Nagasaki, Block copolymer micelles for drug delivery: design, characterization and biological significance. *Adv. Drug Deliv. Rev.* **2001**, 47, 113-131.

[5] H. Cabral, K. Miyata, K. Osada, K. Kataoka, Block Copolymer Micelles in Nanomedicine Applications. *Chem. Rev.* **2018**, 118, 6844–6892.

[6] K. Benz, K.-P. Jaeckel, K.-J. Regenauer, J. Schiewe, K. Drese, W. Ehrfeld, V. Hessel, H. Loewe, Utilization of Micromixers for Extraction Processes. *Chem. Eng. Technol.* **2001**, 24, 11–17.

[7] J. G. Kralj, M. A. Schmidt, K. F. Jensen, Surfactant-enhanced liquid–liquid extraction in microfluidic channels with inline electric-field enhanced coalescence. *Lab Chip* **2005**, 5, 531–535.

[8] D. A. Wenn, J. E. A. Shaw, B. Mackenzie, A mesh microcontactor for 2-phase reactions. *Lab Chip* **2003**, 3, 180–186.

[9] J. G. Kralj, H. R. Sahoo, K. F. Jensen, Integrated continuous microfluidic liquid–liquid extraction. *Lab Chip* **2007**, 7, 256-263.

[10] J. R. Burns, C. Ramshaw, A Microreactor for the Nitration of Benzene and Toluene. *Chem. Eng. Commun*. **2002**, 189, 1611–1628.

[11] R. Lebl, T. Murray, A. Adamo, D. Cantillo, C. O. Kappe, Continuous Flow Synthesis of Methyl Oximino Acetoacetate: Accessing Greener Purification Methods with Inline Liquid–Liquid Extraction and Membrane Separation Technology. *ACS Sustainable Chem. Eng*. **2019**, 7, 20088−20096.

[12] J. H. Bannock, T. W. Phillips, A. M. Nightingale, J. C. DeMello, Microscale separation of immiscible liquids using a porous capillary. *Anal. Methods* **2013**, 5, 4991−4998.

[13] T. W. Phillips, J. H. Bannock, J. C. DeMello, Microscale extraction and phase separation using a porous capillary. *Lab Chip* **2015**, 15, 2960−2967.

[14] A. J. Harvie, J. O. Herrington, J. C. DeMello, An improved liquid–liquid separator based on an optically monitored porous capillary. *React. Chem. Eng*. **2019**, 4, 1579−1588.

[15] C. I. C. Silvestre, J. L. M. Santos, J. L. F. C. Lima, E. A. G. Zagatto, Liquid–liquid extraction in flow analysis: a critical review. *Anal. Chim. Acta* **2009**, 652, 54-65.

[16] H. P. L. Gemoets, G. Laudadio, K. Verstraete, V. Hessel, T. Noël, A Modular Flow Design for the meta-Selective C-H Arylation of Anilines. *Angew. Chem. Int. Ed.* **2017**, 56, 7161-7165.

[17] N. Weeranoppanant, A. Adamo, In-Line Purification: A Key Component to Facilitate Drug Synthesis and Process Development in Medicinal Chemistry. *ACS Med. Chem. Lett.* **2020**, 11, 9-15.

[18] C. J. Ferguson, R. J. Hughes, D. Nguyen, B. T. T. Pham, R. G. Gilbert, A. K. Serelis, C. H. Such, B. S. Hawkett, Ab Initio Emulsion Polymerization by RAFT-Controlled Self-Assembly. *Macromolecules*, **2005**, 38, 2191-2204.

[19] L. Brocken, P. D. Price, J. Whittaker, I. R. Baxendale, Purification of poly(acrylic acid) using a membrane ultra-filtration unit in flow. *React. Chem. Eng*. **2017**, 2, 656-661.