Made available by Hasselt University Library in https://documentserver.uhasselt.be

Effects of Supply Chain Management on Tomato Export in Iran: Application of Structural Equation Modeling

Peer-reviewed author version

Fatemi, Matin; AZADI, Hossein; RAFIAANI, Parisa; Taheri, Fatemeh; Dubois, Thomas; VAN PASSEL, Steven & WITLOX, Frank (2018) Effects of Supply Chain Management on Tomato Export in Iran: Application of Structural Equation Modeling. In: Journal of food products marketing, 24(2), p. 177-195.

DOI: 10.1080/10454446.2017.1266552
Handle: http://hdl.handle.net/1942/23785

Effects of Supply Chain Management on Tomato Export in Iran: Application of Structural Equation Modeling

Matin Fatemi, Hossein Azadi, Parisa Rafiaani, Fatemeh Taheri, Thomas Dubois, Steven Van Passel & Frank Witlox

Abstract

Although Iran is one of the top ten countries in the world that produce tomatoes, the level that they are exported into the global market is low. This issue may have resulted from a major problem within tomatoes' supply chain management. This paper aims to develop an empirical model of the supply chain management (SCM) of tomato companies. Throughout the reviewed literature, a SCM construct with different six indicators has been developed, including information sharing, long-term relationship, cooperation, quality, flexibility, and delivery. In this study, the influence of the SCM components on tomato export was identified through the use of empirical data that was collected from 20 different tomato companies in Northeast Iran. Using structural equation modeling, the major elements of SCM were found to have significant impacts on the export of tomatoes. Results also showed that information sharing, cooperation, flexibility, quality and delivery had significant positive effects on the export of tomatoes.

KEYWORDS agricultural production management, marketing, supply chain, development strategy, structural equation modeling.

INTRODUCTION

Export is considered an indispensable activity of business development in developing countries (Sousa & Bradley, 2008; Casillas et al., 2010; Gassmann et al., 2014). There are different studies

that focused on the effects of various factors in order to improve export activities, such as the studies conducted by Chi and Sun (2013) in China; Stoian et al. (2011) in Spain; Bloemer et al. (2013) in the Netherlands and Villar et al. (2014) in Spanish and Italian manufacturing companies. In this regard, considering various components of supply chain management (SCM) and understanding their role in the successful performance of different firms in different business activities, like export, have become a necessity in order to improve their competitive place in today's worldwide environment and to increase profitably (Cachon & Fisher, 2000; Karimi & Rafiee, 2014).

The SCM, in its essence, considers that companies establish alliances with partners in a common chain in order to enhance their competitive privileges that are exposed by leading the operational function of all partners involved in the chain (Van Acker et al., 2007; Van Acker & Witlox, 2010; Miguel & Brito, 2011). There are many previous studies that address supply chain practice in different sectors. Donlon (1996), Tan et al. (1998; 2002). Li (2002), Chen and Paulraj (2004), Min and Mentzer (2004), Hingley and Sodano (2009) and Oehmen (2009) all categorized various constructs of SCM practices and supported their associations with firm performance. However, few studies have focused on the SCM practices in the agriculture sector. For several reasons, Iran is an interesting country in this case, especially with regard to the export of tomatoes. The country is one of the major areas that produce tomatoes and its processed products (e.g., ketchup) due to its suitable climate for tomato growth. Figure 1 shows the quantity of exported tomatoes by producers in Iran. According to Figure 1, the export market of tomato products in Iran fluctuated significantly, as the export quantity slightly increased in 2001, then dramatically fell from 150000 to 5000 tons between 2007-2009, and then increased significantly to 250000 in 2010.The highest quantity observed (2010 is the latest data available) compared to the previous

years. Already, around 90 percent of raw tomatoes are delivered to tomato processing companies (Mazehary & Yazdany, 1993) and a noticeable 60 percent of the total production and export in the country comes from the Khorasan province located in Northeast Iran (Figure 3).

Insert Figure 1 Approximately Here

There are many companies that actively buy and sell tomatoes products, causing a competitive environment both inside and outside of the country. The purchasing departments within these companies ought to establish communication with farmers who are the suppliers of the raw tomato; As today, companies realize that their purchasing departments can work more effectively by increasing the efficiency and effectiveness of their performance. Therefore, they have changed their purchasing strategy and try to find a more efficient approach when purchasing their goods. Given that, purchasing departments are seen as an important part of the company that comply to its strategic objectives. For this purpose, a strategic purchase approach is needed to implement strategic planning when purchasing goods; meaning that establishing a strategic relationship with suppliers is necessary in order to access competitive advantages. In this regard, SCM is considered as an essential approach for companies to achieve these objectives (Vajdyvahid, 2004).

As Figure 2 shows, the SCM encompasses producers, wholesalers, processors, retailers, and final consumers. Of producers, there are three groups, including contract, non-contract, and farmers without a contract and a few wholesalers who buy tomatoes directly from producers and sell them to the processors. Industrial Processors buy fresh tomatoes from wholesale or contract farmers and are able to increase the value of those tomatoes by turning it into ketchup, sauce, etc. A portion of the final products will be exported and another will be sold to consumers in Iran. Retailers usually buy the fresh tomatoes fruit squares and processed tomatoes from

industrial processors . Then, these products are presented to the final consumers who usually buy fresh or processed tomatoes from retailers.

Insert Figure 2 Approximately Here

During the past ten years, tomato production in Iran has always been 20% higher than the demand[1]. Results from a survey on tomato trade show that the policy reform process affected the tomato exports in Iran. Especially during 2007-2009, tomato exports have surprisingly been reduced to around zero (see Figure 1). The figures also demonstrate that although Iran has been one of the top ten countries that produce tomatoes in the world, with 600,000 tons in 2012 (FAOSTAT, 2012), it had a low share of export in the global market and was not in the top ten list of the major exporters anymore. The country ranked 13th in terms of the quantity of tomatoes exported in the global market (FAOSTAT, 2011). This is an issue and can be considered as a serious problem in tomatoes' supply chain management. This paper aims to develop an empirical model of supply chain management for tomato companies. Accordingly, this study tries to shed light on the relationship between SCM and tomato's export in order to investigate the impacts of SCM on exports. Understanding the relationship between SCM components and export can provide useful information on how SCM is able to assist the performance of industrial tomato producers as well as promoting the position of Iran as an exporter of this product.

The next section of this paper presents a brief discussion on factors that affect SCM practices by reviewing literature that addresses supply chain constructs in order to determine the components most associated with SCM. Next, the applied hypotheses and the methodology will be presented to conduct the survey. Afterwards, an analysis of results and discussion will be presented, followed by the implications of the study.

[1] (http://www.khabaryaab.com/)

SCM CONSTRUCTS

In this paper, the key factors of SCM should be identified first. To do so, we refer to the studies that have been conducted so far with regard to the SCM and its components. There are many previous studies on supply chain practice in different sectors. The study by Donlon (1996) identified supplier partnership, continuous process flow, cycle time compression and information technology sharing as the main aspects of SCM. The study by Tan et al. (2002) recognizes just-in-time (JIT) capabilities, integration of supply chain activities, geographic location, customer needs, and information sharing as major components of SCM. More recently, supply chain practice was empirically tested by Li (2005). He identified seven elements of supply chain practices, including customer relationships, strategic supplier partnerships, lean system, information quality, information sharing, trust, and commitment. The two following publications contributed to the determination of the key elements of SCM: Chen and Paulraj (2004) represented a SCM framework that consisted of a supply network structure that is identified by powerful interactions between involved partners, minimum vertical integration, a lack of power based connections; long-term interplays, managed with efficacious relationship, cross-functional teams, planning procedures, and early engagement of supplier in major projects; and logistics integration. Min and Mentzer (2004) also considered SCM as a second order construct that includes agreed upon visions and goals, information sharing, risk and reward sharing, cooperation, agreed supply chain leadership, long-term relationship, and process integration. Combining both studies, as well as taking into account other influential contributions, Miguel and Brito (2011) recently suggested five constructs of present SCMs: information sharing, long-term relationship,

risk and reward sharing, cooperation, and processes integration. A summary introduction of each of the SCM dimensions is provided next.

Information sharing is the ongoing flow of communication that arises, formally or informally, among partners in order to achieve enhanced planning and control within the chain (Chen & Paulraj, 2004; Wilson & Carlson, 2004; Mentzer et al., 2001). Despite the importance of information sharing, the significance of its effects on SCM depends on the type of shared information, when, how, and with whom it is shared (Peng et al., 2011). Companies should consider their information as a strategic property and make sure that it flows quickly, without delaying and distortion (Karimi & Rafiee, 2014).

Long-term relationship refers to the commitment of the supply chain members to the relationship by investing in resources and endeavors that maintain the strategy (Cooper & Ellram, 1993). Good relations among the members of the supply chain, including customers, are necessary for the successful performance of SCM practices (Jie et al, 2013). Moreover, the analysis of the internal and external studies showed that although the focus of the previous studies was on long-term relationships, the influence of long-term relationships on supply chain management has been noticeably ignored (Fynes et al., 2005). Companies implementing SCM need to continuously monitor the long-term relationship components of the supply chain. Some of the main benefits of holding long-term relationships are comprised of shared significant information with involved members, and sharing a specified amount of trust and promoting informed management (Griffith et al., 2006).

Risk and reward sharing is based on a situation where companies share investments on assets, project costs and revenues, and losses through a win-win relationship (no power), (Chen & Paulraj, 2004; Cooper & Ellram, 1993; Mentzer et al., 2001).

Cooperation means that all structures devote supplementary resources to design and conduct strategic processes or plans to cope with disagreements (Chen & Paulraj, 2004; Mentzer et al., 2001; Fritz & Schiefer, 2008).

Process integration considers that organizations will work together in order to have a sequential and effective flow of substances and resources (Chen & Paulraj, 2004; Mentzer et al., 2001).

Previous studies in different sectors over the years, as well as the study conducted by Miguel and Brito (2011) that were discussed above, highlighted the significance of the following variables for evaluating the performance of the supply chain management: Information sharing, Long-term relationship, Risk and reward sharing, and Process integration. However, these are not the only influential factors that may indicate the role of SCM in the performance of organizations. Flexibility, quality, and delivery are also some other crucial aspects of SCM performance that need to be taken into consideration when measuring SCM performance.

Flexibility defined as the capability of a system to accomplish perceptive and responsive adaptations of its arrangement in order to deal with internal and external doubts. The outstanding significance of flexibility has been demonstrated in different industries by Vickery et al. (1999) and Martinez and Pérez (2005) who showed that flexibility itself and supply chain flexibility in particular are substantial turnkeys to the firms' financial implementations.

With regard to the quality, Levy (1998) considered the challenge of the total quality interaction in the supply chain as a large shift in paradigm. In the traditional paradigm, companies are interested in company-focused issues, like the quality of the product, price, and delivery time. In the new supply chain quality paradigm, supplier–customer links and co-created quality goods have gradually expanded as the main subject matters. Madu et al. (1996) and Lin et al. (2005) found a significant causal relationship between the quality dimensions, including the involved

partners' satisfaction, customer satisfaction and employee service quality , and organizational efficiencies.

There are three *delivery* dimensions, including delivery speed, production lead-time, and delivery reliability (Coyle et al. 2003). Miguel and Brito (2011) cited that delivery elements consist of about six aspects, including delivery time**,** on-time delivery**,** production cycle time**,** new products time to market**,** time to solve customer complaints, and customer order processing time. Miguel and Brito (2011) compared these six constructs with 43 empirical papers published between 1996 and 2007 in significant journals of operations management (POM, JOM, and IJOPM). Based on the literature review, Miguel and Brito (2011) cited that information sharing and co-operation were the two dimensions most studied (33% each), followed by long-term relationship (23%) and process integration (19%). Risk and reward sharing were less studied (only 13%) and the scales utilized to measure this construct had less things in common with each other.

In summary, the literature illustrates SCM implementations from a range of the various perspectives with one similar goal of eventually enhancing the performance of organizations. However, so far a simultaneous consideration of all the mentioned factors has been neglected. This study seeks to address these issues. Consolidating and reviewing the literature and taking into account other influential contributions, in this study, six distinctive dimensions of SCM, including information sharing, long-term relationships, cooperation, flexibility, quality, and delivery, were selected as influential factors when measuring the effects of SCM on tomato export. To the best of our knowledge, no study has examined these critical factors of SCM and their causal connections to the export of tomatoes in Iran**.** Such a connection is examined in this study.

METHODOLOGY

Study Area

The Khorasan Razavi province, which is located in the middle of the Khorasan province, Northeast, Iran, was considered as the study area. One of the major agricultural products of this province are tomatoes. Mazhari et al. (2013) reported that according to the Information Center of Khorasan Razavi Agriculture Organization (2007), the total amount of tomatoes produced in this province was around 617,129 tons, which accounts for about 10% of the entire province's production. Major cities that cultivate this crop are Mashhad (the capital of the province), Chenaran, and Torbat Jam (Mazhari et al., 2013); among which Mashhad holds the largest area under cultivation (31%) and the production (33%) of this crop. In this study, with regard to the large number of tomato processing plants in the Khorasan Razavi province, Mashhad city was chosen as the study population.

Insert Figure 3 Approximately Here

Survey Design

Using census method, 25 tomato plants were chosen in the Khorasan Razavi province. A census study occurs if the entire population is very small or it is reasonable to include the entire population in the study. It is called a census sample because the data is gathered from every member of the population. From the total 25 questionnaires, 20 questionnaires were sent back. A questionnaire that contained two main sections was developed: the objective of the first section was to gather information about SCM and identify the supply chain components. This part of the questionnaire consists of six main indicators and 19 items, which were extracted from the pertinent literature (Table 1). The second section was designed to measure the performance of tomato processing plants in exporting (Table 2). All the questions were scored on a 7-point

Likert scale (totally disagree=1, disagree=2, almost disagree=3, no opinion=4, almost agree= 5, agree= 6 and totally agree=7).

Insert Table 1 Approximately Here

Insert Table 2 Approximately Here

After completing the questionnaire, the data were analyzed by SPSS (version 19) and AMOS (version 18).

Reliability of Questionnaire

The reliability of the main indices of the study was confirmed using Cronbach's alpha coefficients as shown in Table 3. The results of the table confirm the reliability of each indicator.

Insert Table 3 Approximately Here

Research Hypothesis and Conceptual Model

Six hypotheses were formulated and tested in this study:

H1: Information sharing has a positive effect on export.

H2: Long-term relationships have a positive effect on export.

H3: Cooperation has a positive effect on export.

H4: Flexibility has a positive effect on export.

H5: Quality has a positive effect on export.

H6: Delivery has a positive effect on export.

A conceptual framework has been developed in this study in order to postulate the causal links between SCM and tomato export. This enables the use of statistical models to evaluate and

identify the SCM factors that may influence export. Therefore, the structural equation modeling (SEM) technique was used to test the proposed hypothesis. SEM has been substantially considered in social sciences and is a professional multivariate statistical method through which a scholar can establish theoretical concepts; analyze multivariate interactions between and within observed (that can be directly evaluated) and latent (that cannot be examined directly) indicators; and confirm proposed causal connections according to a couple or more structural equations. In general, SEM is a combination of measurement and structural models. Based on the measurement models, the researcher defines which of the dimensions is the observed variables or indicators and which is a latent variable. Based on these structural models, the correlation and various effects of different variables can be determined. In fact, structural models deal with the direct and indirect connections between latent variables (Lin et al., 2005). Thus, these models can process several tasks at the same time, including assessment indicators, direct and indirect impacts, measurement acceptability, and quality as well as defined relationships between determinants (Daneshvar & Farahmand, 2012). In this paper, the latent variables are SCM and export. A latent variable is a variable that cannot be observed directly and must be inferred from measured variables. Latent variables are implied by the covariance among two or more measured variables. They are also known as factors (i.e. Factor analysis), constructs or unobserved variables. The export variable is called a latent variable here since the export data of companies was not available separately.

RESULT

Structural Equation Model (SEM)

Figure 4 shows the summary results of the measurement and the results of testing the hypothesis of the structural relationships among the latent variables. In this figure, information sharing, long-term relationship, cooperation, flexibility, quality, and delivery are considered as the latent variables that make up the SCM. In measurement models, error variables e1 to e6 are related to a dependent latent variable and d1 to d19 error variables deal with the independent latent variables. In contrast, in structural models Z1 and Z7 are error variables. There are seven measurement models in this figure; measurement models related to export, information sharing, long-term relationships, cooperation, flexibility, quality, and delivery.

Insert Figure 4 Approximately Here

In order to evaluate the structural model, several fit indices were utilized to ensure that results were acceptable and consistent with the underlying theory. There are over 30 model fit indicators that are usually identified in the Amos software output, and the most important of which were utilized to test the goodness of fit for the measurement model. Table 4 illustrates the degree of fit indices for the structural model. As shown in the table, the structural model analysis had a fair to good fit. The Root Mean Square Error of Approximation (RMSEA) is a parsimonious index that corrects the model's complexity. A RMSEA less than 0.05 is evidence of a good model. The RMSEA estimates for the current study were 0.00, which shows a reasonable fit. Values close to 0.90 or 0.95 for the Tucker-Lewis Index (TLI) reflects a good model fit, which is not the case in this study where it is estimated at 2.32. These indices, however, are more heavily impacted by a relatively small sample size, and, as Byrne (1997) points out, the comparative fit index (CFI) is more appropriate when the sample size is small. The CFI was used to make a comparison between the proposed models and baseline models. The CFI values near or higher than 0.9

provide a good index for the model fit. In this model, a value of 1 expresses a good model. According to these results, the data fits the model quite well.

Insert Table 4 Approximately Here

Path Analysis

There was a restriction in the structural equation modeling due to the small sample size. Therefore, path analysis was used to determine the direct and indirect relationships between different variables. Figure 5 shows the results of the path analysis.

Insert Figure 5 Approximately Here

Five of the study hypotheses are supported by the results of the path analysis. As shown in Figure 5, information sharing, cooperation, flexibility, quality, and delivery are significantly correlated with "export", which confirms H1, H3, H4, H5, and H6, among which, "flexibility" has the highest impact (0.23) and the "quality" of SCM has the lowest impact (0.04) on export. The relationship between cooperation and export (H3) as well as supply chain delivery and export (H6) are significant at a level of 0.05 with an estimate of 0.12 and 0.8, respectively. Furthermore, the results do not support the hypothesis that long-term relationships have any direct positive impacts on export (H2), but rather that it has a negative effect. As a result, H2 is rejected. The figure also supports the existence of positive relationships between all SCM dimensions. Accordingly, various aspects of SCM developed strong, sometimes extremely strong, relationships among each other, but none of them can be considered identical. These results are further discussed in the next section

DISCUSSION AND CONCLUSION

This study analyzed the relationship between SCM and the performance of tomato companies in the export of tomato products by identifying the main components of SCM; which is comprised of six main dimensions (information sharing, long-term relationship, cooperation, flexibility, quality and delivery). To do so, this paper presented a review of the existing literature in order to define the main dimensions of the SCM. At the end, a conceptual framework was developed to show the connection between SCM variables and the export of tomatoes. The suggested model articulates the significant effects of different essential SCM variables on tomato export. Major findings of this research and their implications are dealt with in the following discussion of this section.

The first finding concerns the positive impact of information sharing on tomato export, which is in line with the studies conducted by Walton (1996), Garvin (1987), Jie et al. (2007), Karimi and Rafiee (2014), who found a significant relationship between the level and quality of information sharing and the company's performance. However, Krause et al. (2007) found weak support for the impact of information sharing on the overall operational performance.

While the second finding of this study, with regard to long-term relationships, showed a strong negative relationship with tomato exports and has been identified as a key SCM driver that affects firm performance in the SCM literature (Min & Mentzer, 2004). Our results show that there is a weak relationship between producers of tomato in Iran's tomatoes processing industries, which negatively affect the export performance of tomatoes. In this regard, Ural (2009) found that information sharing has a positive influence on export performance of small and medium-sized firms in Turkey. He concluded that exchanging information between exporters and importers promote the exporting implementations of Turkish entities. If exporters

clearly communicate with importers and exchange official and private information and strategic matters, it will enhance the successful function of export activities. Long-term relationships are likely to comprise collaboration, target, and risk sharing. Our findings also showed that long-term relationships had a positive connection with other SCM dimensions. For instance, long-term relationships have a strong positive correlation with the delivery and flexibility aspects of SCM, which consequently influence firm performance as well. Similarly, Ural (2009) stressed that when exporters are informed about importer requirements according to the assessments of the perceptible related features of the product, such as delivery or service, their export performance will be more efficient. Ernst (1987) also found that long-term relationships assist the exchange of information and methods in an effective manner, which results in a simpler delivery flexibility. It has also been mentioned that long-term relationships and efficient information-sharing between the various sectors of an exporting structure, like delivery systems and distribution methods, have a positive effect on the flexibility of delivery functions (Vickery et al., 1999). Therefore, considering the negative relationship between this dimension and tomato export in our study, it can be noted that the goal of increasing the export of tomato products cannot be achieved without strengthening this kind of relationship. It is more effective if export managers cooperate with the related internal, as well as external, units and accept the priority of long-term relationships over the possible short-term approaches in order to achieve a successful export performance of tomato products.

The third outcome in connection with of the structural equation model supports the conclusion that the effect of cooperation on export is positive. This finding is also consistent with the findings of Carr and Pearson (1999) and Chen et al. (2004). Although these studies showed a positive relationship others reported a weak connection between cooperation and firm

performance. Turnbull et al. (1992) report the difficulties of the UK firms to reproduce Japanese cooperative implementations. Burnes and New (1997) notify their readers about the adverse effects of overusing persuasive language when describing the advantages of cooperative connections. Combs and Ketchen (1999) determined that the effect of cooperation on performance relies on the relationship context, while Vereecke and Muylle (2006) and Horta et al. (2009) found that there is only a poor relationship between performance and cooperation.

The fourth finding of this study confirms the existence of a significant and positive relationship between the flexibility and export of tomatoes. This finding is in line with many previous studies that found a positive relationship between supply chain flexibility and the performance of a firm (Vickery et al., 1999; Duclos et al. 2003; Garavelli, 2003; Agus, 2011; McDowell, 2013). Flexibility has been viewed as the ability of a supply chain to react to uncertainties (Das & Abdel-Malek, 2003). Considering the increasing competition in the export of processed tomato products among exporting countries, as well as highly unpredictable consumer demand for such products, flexibility and the ability to change the type of products produced at various time intervals are very important. Flexibility helps reduce the costs of switching from one product line to another. Therefore, Iran's tomatoes processing firms should pay special attention to this variable, as it has a greater impact on export.

For the fifth finding, there is sufficient empirical evidence to support the existence of a positive relationship between quality and delivery and tomato industries' performance regarding export. Similarly, Miguel and Brito (2011) found a positive relationship between SCM implementation and operational performance in terms of flexibility, quality, and delivery. Nevertheless, our findings showed that the "quality" indicator has less influence on export compared to the other indicators. Therefore, Iranian tomato processing industries need to increase their efforts to

enhance the quality of tomato processing if they want to be successful in the competitive global market.

Overall, the empirical results provided evidence of a positive impact of SCM on the performance of tomato processing firms regarding export and confirm previous empirical studies (Min & Mentzer, 2004; Lin et al., 2005; Carr & Kaynak, 2007; Miguel & Brito, 2011; Karimi & Rafiee, 2014) that found a positive relationship between the SCM and performance. The main contribution of the present study, however, resides in the relationship between the SCM constructs and the export of tomatoes. By employing path analysis and structural equation modeling, this study illustrated the significant role of SCM and the relationship between its components and the export of Iran's tomato processing industry.

These results help middle-line managers in the tomato processing industry to know which components and practices of supply chain management are more important to focus on in order to improve the export of this product. From the managerial point of view, the findings demonstrate the importance of SCM in emerging economies and the fact that it can be a competitive asset that results in superior performance in all dimensions simultaneously. Future studies could focus on the role of each construct on supply chain management performance. The studies could also try to further investigate on how Iranian tomato processing industries evaluate the performance of their supply chain and what significant constraints are emerge when implementing supply chain management and what kind of shifts should be made to tomato supply chains in order to enhance their performance.

ACKNOWLEDGEMENT

The authors wish to thank Ms. Bethany Gardner from the Department of Linguistics, the State University of New York at Binghamton, for her kind help in improving the English of this text.

REFERENCES

Agus, A. (2011). Supply chain management, Supply chain flexibility and business performance. *Journal of Global Strategic Management*, 09, 134-145.

Bloemer, J., Pluymaekers, M., & Odekerken, A. (2013). Trust and affective commitment as energizing forces for export performance. *International Business Review*, 22(2), 363-380.

Burnes, B., & New, S. (1997). Collaboration in Customer-Supplier Relationships: Strategy, Operations and the Function of Rhetoric. *The Journal of Supply Chain Management*, 33(3), 10-17.

Byrne, B.M. (1997). Structural Equation Modeling with LISREL, PRELIS, and SIMPLIS, Lawrence Erlbaum Associates, Mahwah, NJ.

Cachon, G.P., & Fisher, M. (2000). Supply Chain Inventory Management and the Value of Shared Information. *Management Science,* 46(8), 1032-1048.

Carr, A. S., & Pearson, J. N. (1999). Strategically managed buyer-supplier relationships and performance outcomes. *Journal of Operations Management*, 17(5), 497-519.

Carr, A. S., & Kaynak, H. (2007). Communication methods, information sharing, supplier development and performance. *International Journal of Operations & Production Management*, 27, 346-370.

Casillas, J.C., Acedo, F.J., & Barbero, J.L. (2010). Learning, unlearning and internationalisation: Evidence from the pre-export phase. *International Journal of Information Management*, 30(2), 162-173.

Chen, I. J., Paulraj, A., & Lado, A. A. (2004). Strategic purchasing, supply management, and firm performance. *Journal of Operations Management*, 22(5), 505-523.

Chen, I. J., & Paulraj, A. (2004). Towards a theory of supply chain management: the constructs and measurements. *Journal of Operations Management*, 22, 119-150.

Chi, T., & Sun, Y. (2013). Development of firm export market oriented behavior: Evidence from an emerging economy. *International Business Review*, 22(1), 339-350.

Combs, J. G., & Ketchen J. D. J. (1999). Explaining interfirm cooperation and performance: toward a reconciliation of predictions from the resource-based view and organizational economics. *Strategic Management Journal*, 20(9), 867-888.

Cooper, M. C., & Ellram, L.M. (1993). Characteristics of Supply Chain Management and the implications for purchasing and logistics strategy. *The International Journal of Logistics Management*, 4 (2), 13-24.

Coyle, JJ, Bardi, EJ., & Langley, J. (2003). The Management of Business Logistics. Thomson South-Western, Mason, OH.

Daneshvarkakhki, M., & Farahmandgelyan, K. (2012). Review of interactions between e-commerce, brand and packaging on value added of saffron: A structural equation modeling approach. *African Journal of Business Management,* 6(26), 7924-7930.

Das, S.K., & Abdel-Malek, L. (2003). Modeling the flexibility of order quantities and lead-times in supply chains. *International Journal of Production Economics*, 85, 171-181.

Donlon, J. P. (1996). Maximizing value in the supply chain. *Chief Executive*, 117, 54-63.

Duclos, L.K., Vokura, R.J., & Lummus, R.R. (2003). A conceptual model of supply chain flexibility. *Industrial Management & Data Systems*, 106(6), 446-456.

Ernst, W. (1987). Corporate profitability and logistics: innovative guidelines for executives. Council of logistics Management: Oak Brook IL.

FAOSTAT. (2010). Trade / Crops and livestock products. http://faostat3.fao.org/browse/T/TP/E

Fritz, M., & Schiefer, G. (2008). Food chain management for sustainable food system development: a European research agenda. *Agribusiness,* 24 (4), 440-452.

Fynes, B., Voss, C., & Búrca, S. (2005). The impact of supply chain relationship dynamics on manufacturing performance. *International Journal of Operations & Production Management*, 25, 6 – 19.

Garavelli, C.A. (2003). Flexibility configurations for the supply chain management. *International Journal of Production Economics*, 85, 141-153.

Garvin, D.A. (1987). Competing on the eight dimensions of quality, *Harvard Business Review*, 65(6), 395-410.

Gassmann, M., Khodorkovsky, M., Friedler, E., Dubowski, Y., & Olsson, O. (2014). Uncertainty in the river export modelling of pesticides and transformation products. *Environmental Modelling & Software*, 51, 35-44.

Griffith, D.A., Harvey, M.G., & Lusch, R.F. (2006). Social exchange in supply chain relationships: The resulting benefits of procedural and distributive justice. *Journal of Operations Management,* 24, 85-98.

Hingley, M., & Sodano, V. (2009). Channel Management and Differentiation Strategies in the Supply Chain for Fresh Produce. *Journal of Food Products Marketing*, 16 (1), 129-146.

Horta, L. H., Artur, L., & Brito, Z. (2009). Cooperation with Customers and Suppliers and Firm Performance. POMS 20th Annual Conference Orlando, Florida U.S.A. May 1 to May 4, 2009.

Jie, F., Parton, K.A., & Cox, R.J. (2013). Linking supply chain practices to competitive advantage: An example from Australian agribusiness. *British Food Journal*, 115(7), 1003-1024.

Jie, F., Parton, K., & Cox, R. (2007). Supply Chain Practice, Supply Chain Performance Indicators and Competitive Advantage of Australian Beef Enterprises: A Conceptual Framework Conference: Australian Agricultural and Resource Economics Society (AARES 51st Annual Conference). Rydges Lakeland Resort Queenstown, New Zealand, 13-16 February 2007.

Karimi, E., & Rafiee, M. (2014). Analyzing the Impact of Supply Chain Management Practices on Organizational Performance through Competitive Priorities (Case Study: Iran Pumps Company). *International Journal of Academic Research in Accounting, Finance and Management Sciences*, 4(1), 1–15.

Krause, D. R., Handfield, R.B., & Tyler B.B. (2007). The Relationship Between Supplier Development, Commitment, Social Capital Accumulation and Performance Improvement. *Journal of Operations Management*, 25, 528-545.

Levy, P. (1998). Total quality management in the supply chain. In: Madu, C.N. (Ed.), Handbook of TQM. Kluwer Academic, London, pp. 275–303.

Li, S.H. (2002). An Integrated Model for Supply Chain Management Practice, Performance and Competitive Advantage. University of Toledo.

Lin, C., Chow, W. S., Madu, C. N., Kuei, C-H., & Yu, P. P. (2005). A structural equation model of supply chain quality management and organizational performance. *Int. J. Production Economics*, 96, 355–365.

Madu, C.N., Kuei, C., & Jacob, R.A. (1996). An empirical assessment of the influence of quality dimensions on organizational performance. *International Journal of Production Research*, 34 (7), 1943–1962

Martinez Sánchez, A., & Pérez Pérez, M. (2005). Supply chain flexibility and firm performance: A conceptual model and empirical study in the automotive industry, *International Journal of Operations & Production Management*, 25(7), 681 – 700.

Mazhari, M., Naseri, M., & Mohammadzadeh, N. (2013). Study of effective factors on tomato supply in Khorasan Razavi with ARDL method. *Annals of Biological Research*, 4(1), 209-212.

Mazehary M, & Yazdany S. (1993). Effects of imperfect Competition on Benefits from Technical Change (A Case Study of Tomato Industry in Khorasan Province from Iran). *Science and Technology of Agriculture and Natural Resources*.7(2), 43-51. (key article in Persian).

McDowell, W.C. (2013). The impact of organizational efficacy and flexibility on small business performance. *The coastal business journal*, 12(1), 1-19.

Miguel, P. L. S., & BritoLuizArtur L. (2011). Supply Chain Management measurement and its influence on Operational Performance. JOSCM. *Journal of Operations and Supply Chain Management*, 4, 56-70.

Min, S., & Mentzer, J.T. (2004). Developing and measuring supply chain management concepts. *Journal of Business Logistics*, 25, 63-99.

Mentzer, J. T., DeWitt, W., Kleeber, J.S., Min, S., Nix,N.W., Smith, C.D., & Zacharia, Z.G. (2001). Defining Supply chain management. *Journal of business Logistics*, 22, 1-25.

Oehmen, J., Ziegenbein, A., Alard, R., & Schönsleben, R. (2009). System-oriented supply chain risk management. *Journal of Food Products Marketing*, 20 (4), 343-361.

Peng, D.X., Schroeder, R.G., & Shah, R. (2011). Competitive priorities, plant improvement and innovation capabilities, and operational performance: A test of two forms of fit. *International Journal of Operations & Production Management*, 31(5), 484-510.

Sousa, C.M.P., & Bradley, F. (2008). Antecedents of international pricing adaptation and export performance. *Journal of World Business,* 43(3), 307-320.

Stoian, M.C., Rialp, A., & Rialp, J. (2011). Export performance under the microscope: A glance through Spanish lenses. *International Business Review*, 20 (2), 117-135.

Tan, K.C., Lyman, S.B., & Wisner, J.D. (2002). Supply chain management: a strategic perspective. *International Journal of Operations and Production Management*, 22 (6), 614-631.

Tan, K.C., Kannan, V.R., & Handfield, R.B. (1998). Supply chain management: supplier performance and firm performance. *International Journal of Purchasing and Materials Management*, 2–9.

Turnbull, P., Oliver, N., & Wilkinson, B. (1992). Buyer-supplier relations in the UK - automotive industry: Strategic implications of the Japanese manufacturing model. *Strategic Management Journal*, 13(2), 159-168.

Ural, T. (2009). The effects of relationship quality on export performance: A classification of small and medium-sized Turkish exporting firms operating in single export-market ventures. *European Journal of Marketing*, 43(1/2), 139 – 168.

Vajdyvahid, M. (2004). Supply chain management. http://www.itiran.com/?type=news&id=1931(key article in Persian).

Van Acker, V., Witlox, F. & Van Wee, B. (2007). The effects of the land use system on travel behaviour: a structural equation modeling approach. *Transportation Planning and Technology*, 30 (4), 331-353

Van Acker, V. & Witlox, F. (2010). Car ownership as a mediating variable in car travel behaviour research using a structural equation modelling approach to identify its dual relationship. *Journal of Transport Geography*, 18 (1), 65-74.

Vereecke, A., & Muylle, S. (2006). Performance improvement through supply chain collaboration in Europe. *International Journal of Operations & Production Management*, 26(11), 1176-1198.

Vickery, S., Clanatone, R. & Dro¨ge, C. (1999). Supply chain flexibility: an empirical study", *Journal of Supply Chain Management: A Global View of Purchasing and Supply*, 35(3), 16-23.

Villar, C., Alegre, J., & Pla-Barber, J. (2014). Exploring the role of knowledge management practices on exports: A dynamic capabilities view. *International Business Review,* 23(1), 38-44.

Walton L.W. (1996). Partnership satisfaction: using the underlying dimensions of supply chain partnership to measure current and expected levels of satisfaction. *Journal of Business Logistics*, 1996; 17(2), 57–75.

Wilson, W.W., & Carlson, D.C.E. (2004). Logistics and supply chain strategies in grain exporting. *Agribusiness*, 20 (4), 449-464.

TABLE 1. The main independent indicators and their items with regard to the supply chain components

Item	Independent indicator
	Information sharing
X1	We share information (financial, production, design, etc.) with our suppliers.
X2	Exchanging information with our suppliers (formal or informally) is frequent.
X3	Any event or change that might affect one unit is immediately communicated with other tomato farmers.
	Long-term relationship
X4	The suppliers see our relationship as a long-term alliance.
X5	The relationship with this supplier is based on a long-term project.
X6	Both parties (this firm and its suppliers) foster the long-term relationship based on cooperation.
	Cooperation
X7	Our key suppliers are involved in new processes and product development.
X8	There are meetings/conferences with our suppliers to discuss sale forecast and planning.
X9	Both parties (the firm and its supplier) establish jointly objectives.
X10	There are cross-functional teams with our supplies for continuous improvement.
	Flexibility
X11	The processing volume of tomato has flexibility to various changes such as climate and seasons.
X12	Having flexibility in various fields such as design of product processes, change of product processes.
X13	Producing mix products with this processed product.
	Quality
X14	To conform the standard and quality of products according to the global scales.
X15	There are number of defects in processed products.
X16	There are number of customer's complaints.
	Delivery
X17	On time delivery processed products to customers.
X18	On time and systematic performance of the company in solving customer complaints.
X19	On time and systematic supply of new products to market.

Adapted from Miguel and Brito (2011).

TABLE 2. The main variables of the study with regard to export

Item	Dependent indicator (Export)
Y1	There are proper packaging systems within the company for exporting tomato products
Y2	Company's unsuitable brand is one of the fundamental problems to export tomato products.
Y3	Company equipped with modern maintenance and transportation systems.
Y4	Long distance of the company from production centers of raw tomato is one of the fundamental problems to export tomato products.
Y5	There are processing tomato industries.
Y6	Lack of knowledge regarding the export market is one of the major constraints for exporting tomato products

Source: research findings

TABLE 3. Test of questionnaire reliability for variables of model

Indicator	Cronbach's alpha
Information sharing	0.74
Long-term relationship	0.70
Cooperation	0.66
Flexibility	0.68
Quality	0.71
Delivery	0.65
Export	0.60

TABLE 4. Model fit summary

Index	Estimate	Situation
Chi-Square	0.51	Good
CFI	1.00	Good
RMSEA	0.00	Good
TLI	2.32	Bad

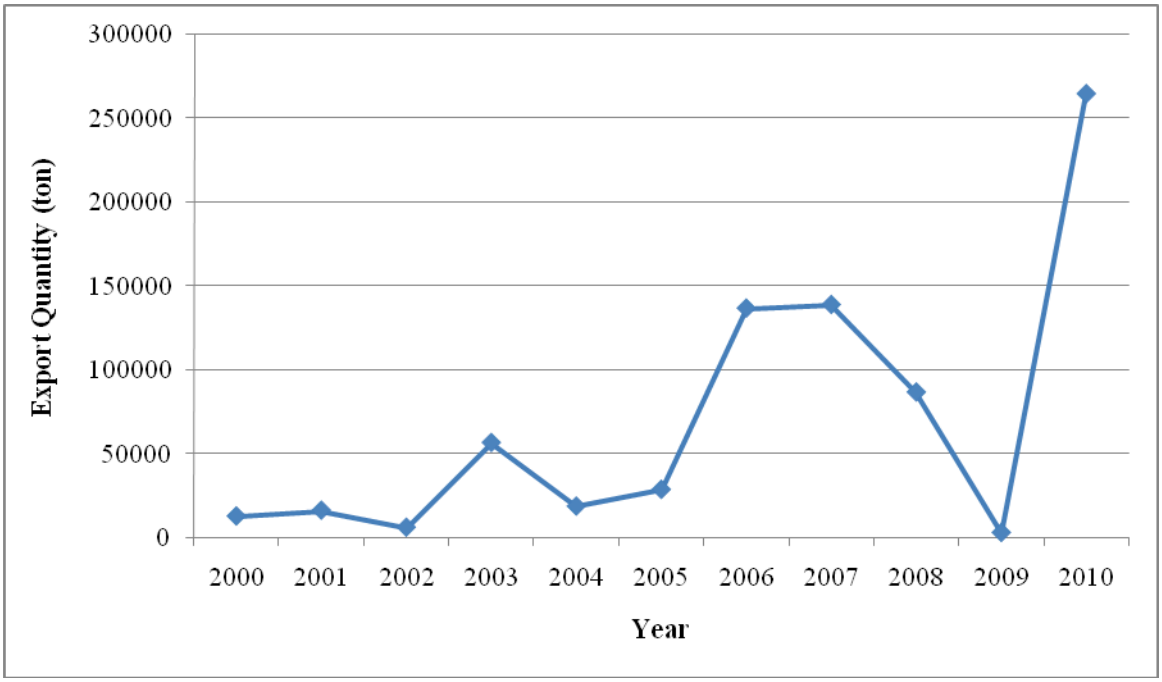

FIGURE 1. Export quantity of fresh tomato in Iran; these data are the net trade and shows the quantity of exported tomatoes (FAO statistical database (FAOSTAT), 2010)

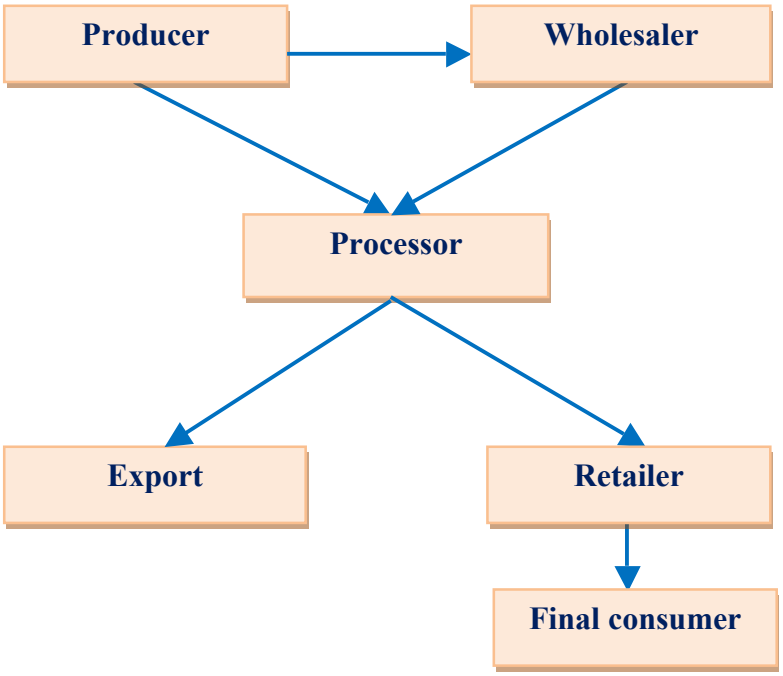

FIGURE 2. The SCM in tomato product in Iran

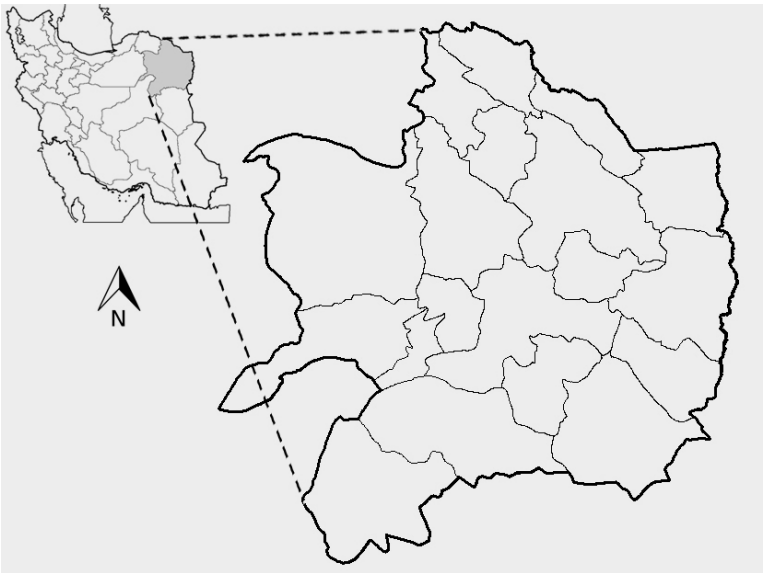

FIGURE 3. The study area

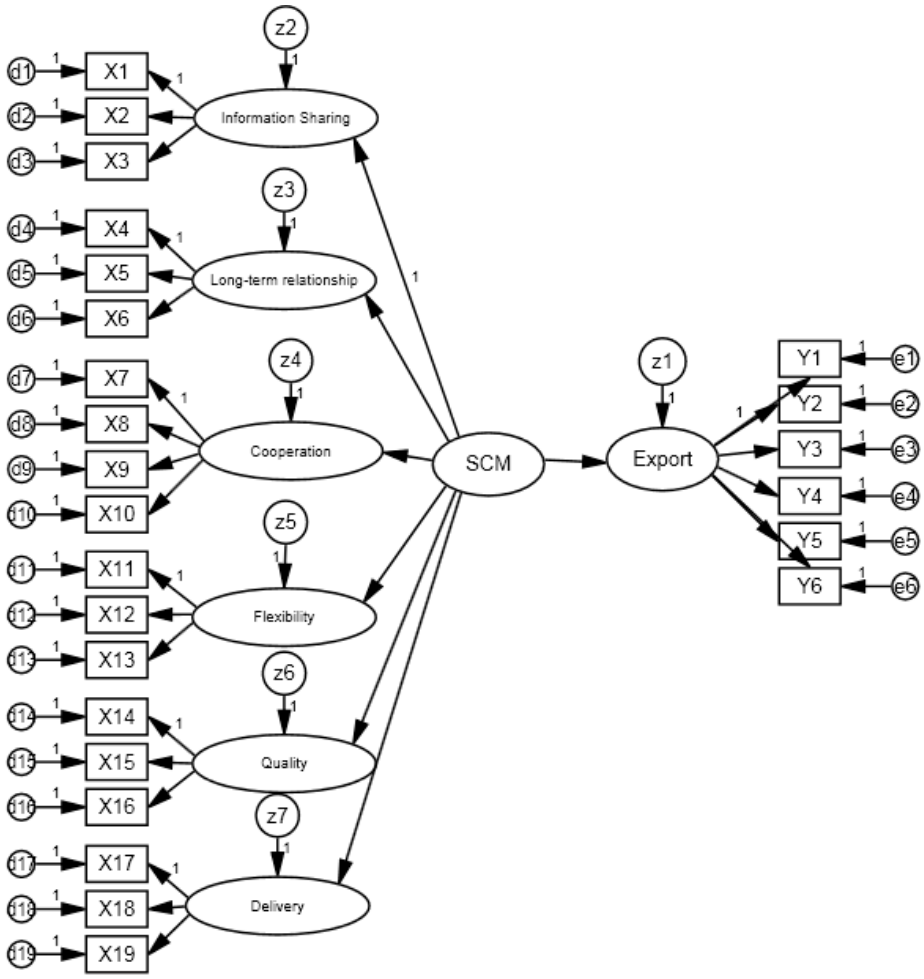

FIGURE 4. The structural equation model (SEM) of the study

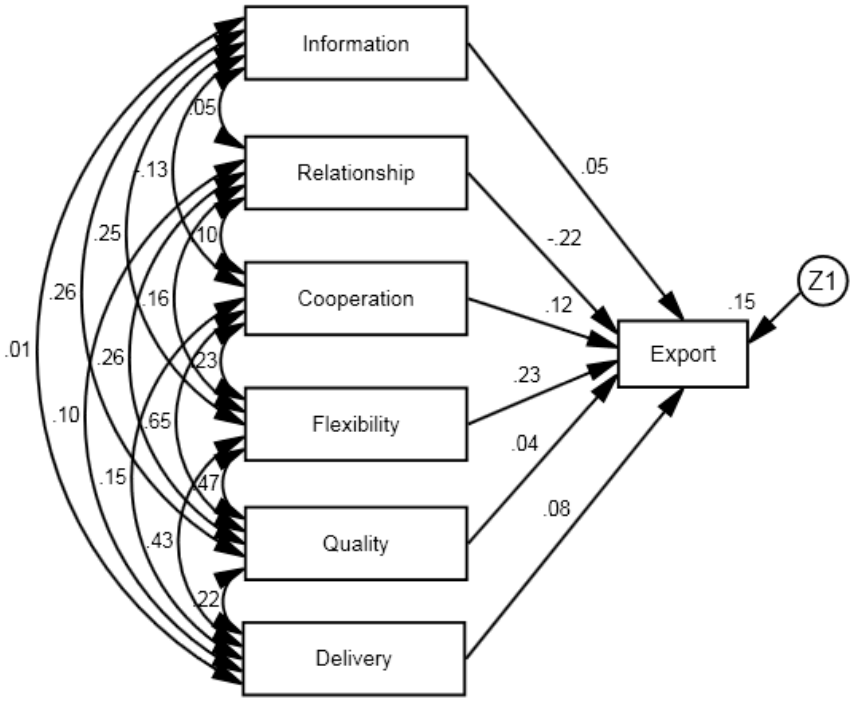

FIGURE 5. The path model